LEGEND

- GAS LINE
- ELECTRICAL AERIAL CABLE
- BELL — UNDERGROUND BELL LINE
- AQUEDUCT PIPELINE
- RAIN CONDUCT
- SANITARY CONDUCT
- GUY-WIRE
- UTILITY POLE
- GUYED POLE
- FIRE HYDRANT
- CIRCULAR GRID
- STORM SEWER
- PUBLIC SIGN
- TRAFFIC LIGHT
- WATER VALVE COVER
- STREET LAMP
- BUMPER POST
- x — x — x — FENCE
- EXISTING TREE
- EXISTING TREE TO CONSERVE
- NEW TREE TO PLANT

NOTES:

PROPERTY BOUNDARY INFORMATION AND PIN DERIVED FROM PLAN OF SURVEY DATED APIL 24, 2023, BY FARLEY SMITH & DENIS SURVEYING LTD"

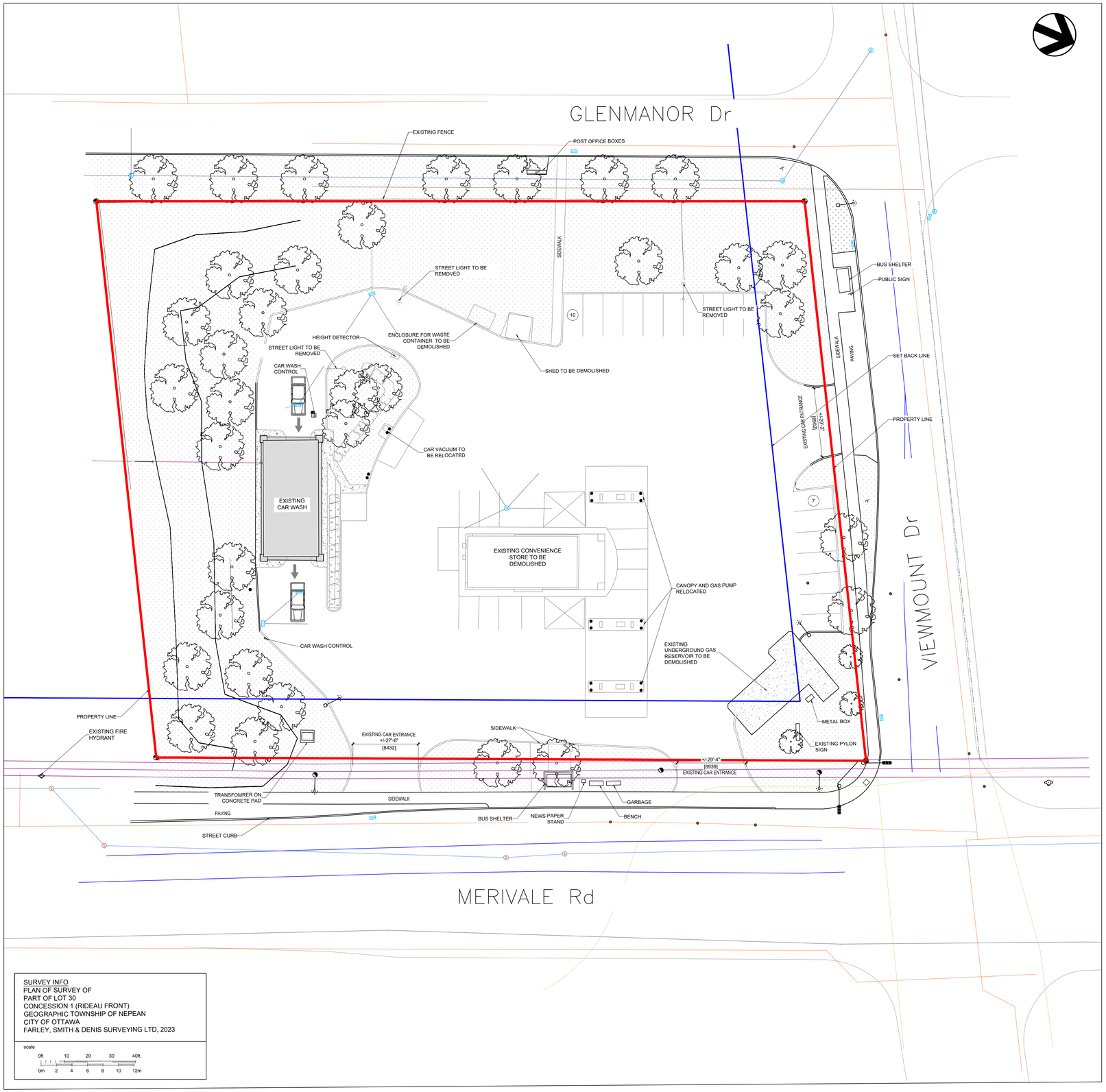

SURVEY INFO
PLAN OF SURVEY OF
PART OF LOT 30
CONCESSION 1 (RIDEAU FRONT)
GEOGRAPHIC TOWNSHIP OF NEPEAN
CITY OF OTTAWA
FARLEY, SMITH & DENIS SURVEYING LTD, 2023

scale
0ft 10 20 30 40ft
0m 2 4 6 8 10 12m

IMPORTANT

NE PAS MESURER LES PLANS, LIRE LES COTES SEULEMENT. L'ENTREPRENEUR DEVRA VÉRIFIER TOUS LES DESSINS, DÉTAILS, SPÉCIFICATIONS, DIMENSIONS ET MESURES AINSI QUE LES CONDITIONS DE LOCAUX OU DU CHANTIER, ET SIGNALER TOUTES ERREURS, OMISSIONS ET / OU ANOMALIES AVANT DE COMMENCER LES TRAVAUX. TOUS LES CHANGEMENTS OU SUBSTITUTIONS DE DÉTAILS ET DE MATÉRIAUX SPÉCIFIÉS SUR CE PLAN DEVRONT ÊTRE APPROUVÉS PAR L'ARCHITECTE OU LE DESIGNER.

DO NOT SCALE DRAWINGS, READ DIMENSIONS FIGURES ONLY. CONTRACTOR SHALL VERIFY ALL DRAWINGS, DETAILS, SPECIFICATIONS, DIMENSIONS AND MESUREMENTS AS WELL AS SITE OR PREMISES CONDITIONS AND NOTIFY THE DESIGNER OF ALL ERRORS, OMISSIONS AND / OR ANOMALIES BEFORE BEGINNING THE WORK. ANY CHANGES OR SUBTITUTIONS TO DETAILS OR SPECIFIED MATERIALS SHOW ON THIS DRAWING MUST BE APPROVED BY THE ARCHITECT OR THE DESIGNER.

RÉVISIONS / REVISIONS

#	DATE	DESCRIPTION	PAR BY
1.	27-01-2025	PRE-CONSULTATION MEETING	NH

Committee of Adjustment
Received | Reçu le
2025-03-21
City of Ottawa | Ville d'Ottawa
Comité de dérogation

Harnois Énergies

ÉQUIPE DE PROJET / TEAM PROJECT :

ARCHITECTURE & DESIGN :
mra architecture + design
T 514.493.6746 Fax
443 Saint-Claude, Montréal
Québec H2Y 3B6
www.mraa.ca

DOSSIER No. / FILE No.: 2304-1010

STRUCTURAL / MECHANICAL / ELECTRICAL :
equation Services d'ingénierie intégrés
T 450.661.5022 Fax
4593 Rue Louis-B.-Mayer, Laval
Québec H7P 6G5
www.equation.ca

DOSSIER No. / FILE No.:

CIVIL :
PARSONS
T +1 613.691.1545 Fax
100-1223 Michael St North, Ottawa
Ontario K1J 7T2
www.parsons.com

DOSSIER No. / FILE No.:

CHARGÉ DE PROJET : PROJECT MANAGER :	SIGNÉ PAR : APPROVED :
M. RENAUD	MANON RENAUD

CLIENT: HARNOIS NEPEAN

PROJET / PROJECT: CONVENIENCE STORE /RESTO
1660 MERIVALE
NEPEAN, ONTARIO

DISCIPLINE / DÉPARTEMENT: ARCHITECTURE

TITRE DU DESSIN / TITLE: EXISTING SITE PLAN

ÉCHELLE / SCALE	DESSINÉ PAR / DRAWN BY
1"= 20'-0'	N.HANNA

DATE: 27-01-2025

No SITE

DOSSIER: 2304-1010

A-050 — FEUILLE / SHEET

2 — DE / OF

LEGEND

- GAS LINE
- ELECTRICAL AERIAL CABLE
- BELL — UNDERGROUND BELL LINE
- AQUEDUCT PIPELINE
- RAIN CONDUCT
- SANITARY CONDUCT
- GUY-WIRE
- UTILITY POLE
- GUYED POLE
- FIRE HYDRANT
- CIRCULAR GRID
- STORM SEWER
- PUBLIC SIGN
- TRAFFIC LIGHT
- WATER VALVE COVER
- STREET LAMP
- BUMPER POST
- FENCE
- EXISTING TREE
- EXISTING TREE TO CONSERVE
- NEW TREE TO PLANT

NOTES:

PROPERTY BOUNDARY INFORMATION AND PIN DERIVED
FROM PLAN OF SURVEY DATED APIL 24, 2023,
BY FARLEY SMITH DENIS & SURVEYING LTD"

ZONING COMPLIANCE TABLE

Sec.	Zoning Provision	Required	Proposed Development	In Compliance (Yes/No)
185.3	(a) minimum lot area	No minimum	6,603.3m²	Yes
	(b) minimum lot width	No minimum	91.5m	Yes
	(g) maximum floor space index	No maximum	0.1	Yes
186.10	(c) minimum interior side abutting residential zone Beyond 20m back from street	7.5m	15.9m	Yes
	(d) minimum rear yard Building within 20m of lot line abutting public street	3.0m	16.1m	Yes
	(h) minimum ground floor façade consisting of transparent glazing/ active customer entrance access (building walls facing public streets)			
	Merivale Road	50%	52%	Yes
	Viewmount Drive	50%	0%	No
	Glenmanor Drive	50%	0%	No
	(i) maximum front yard (gas bar uses)	3.0m	36.2m	No
110	(3) Minimum setback of refuse collection and refuse loading areas (a) From lot line abutting public street	9.0m	17.4m	Yes
	(3c) Minimum screening of refuse collection Opaque screen or soft landscaping (in-ground container)	2.0m	2.0m (Soft landscaping)	Yes

Vehicle Parking (Section 101)	Proposed Gross Floor Area	Required Parking Ratio	Number of Spaces Required
Convenience Store	442m²	3.4 spaces/100m²	15
Car Wash/Gas Bar	209m²	None	0
		TOTAL SPACES REQUIRED	15 parking spaces
		TOTAL SPACES PROVIDED	17 parking spaces
Bicycle Parking (Section 111)	**Proposed Gross Floor Area**	**Required Parking Ratio**	**Number of Spaces Required**
Convenience Store	442m²	1 space/250m²	2
Car Wash/Gas Bar	209m²	1 space/1500m²	0
		TOTAL SPACES REQUIRED	2 parking spaces
		TOTAL SPACES PROVIDED	14 parking spaces

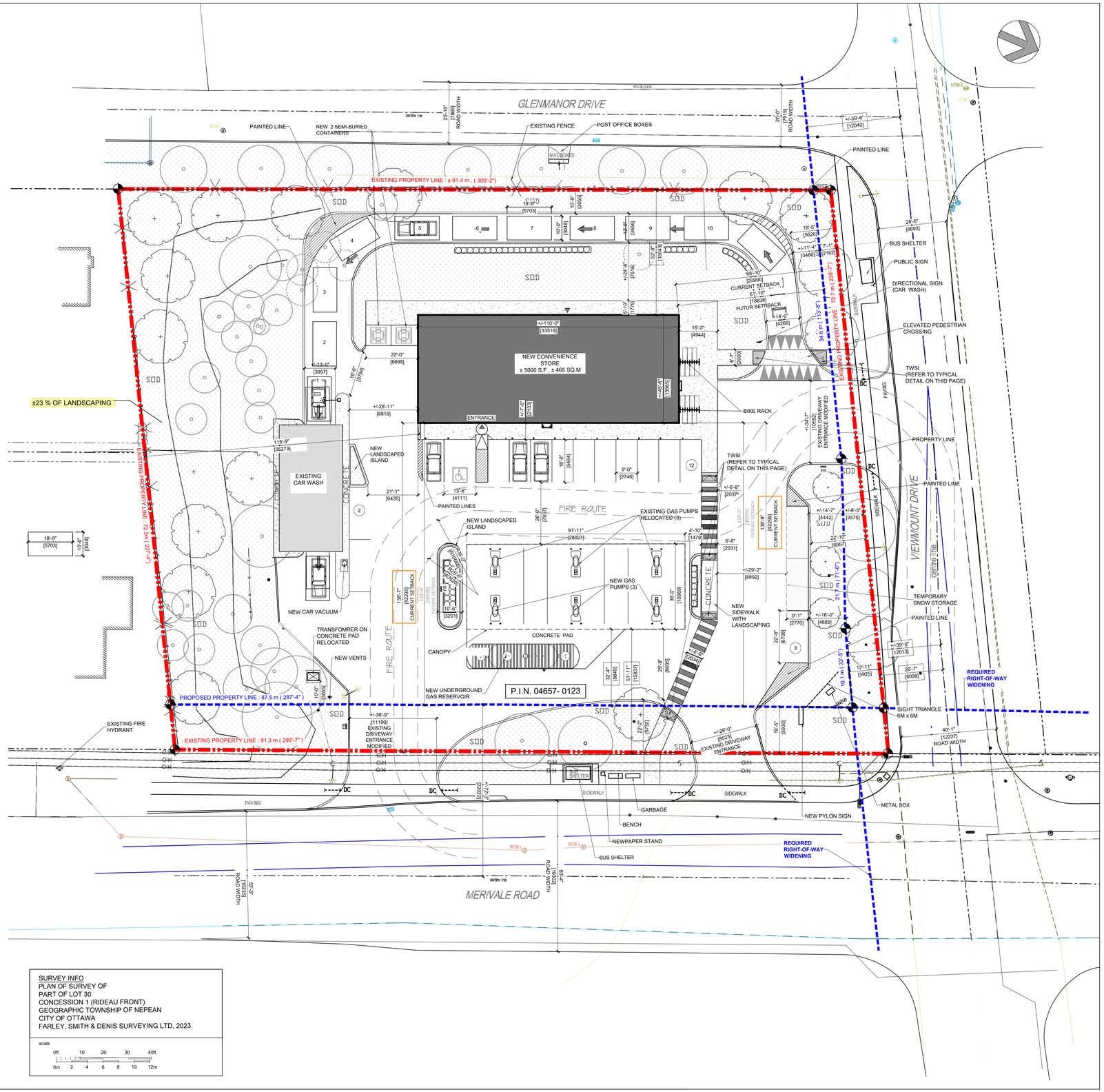

SURVEY INFO
PLAN OF SURVEY OF
PART OF LOT 30
CONCESSION 1 (RIDEAU FRONT)
GEOGRAPHIC TOWNSHIP OF NEPEAN
CITY OF OTTAWA
FARLEY, SMITH & DENIS SURVEYING LTD, 2023

scale
0ft 10 20 30 40ft
0m 2 4 6 8 10 12m

IMPORTANT

NE PAS MESURER LES PLANS, LIRE LES COTES SEULEMENT. L'ENTREPRENEUR DEVRA VÉRIFIER TOUS LES DESSINS, DÉTAILS, SPÉCIFICATIONS, DIMENSIONS ET MESURES ANSI QUE LES CONDITIONS DE LOCAUX OU DU CHANTIER, ET SIGNALER TOUTES ERREURS, OMISSIONS ET / OU ANOMALIES AVANT DE COMMENCER LES TRAVAUX. TOUS LES CHANGEMENTS OU SUBSTITUTIONS DE DÉTAILS ET DE MATÉRIAUX SPÉCIFIÉS SUR CE PLAN DEVRONT ÊTRE APPROUVÉS PAR L'ARCHITECTE OU LE DESIGNER.

DO NOT SCALE DRAWINGS, READ DIMENSIONS FIGURES ONLY. CONTRACTOR SHALL VERIFY ALL DRAWINGS, DETAILS, SPECIFICATIONS, DIMENSIONS AND MESUREMENTS AS WELL AS SITE OR PREMISES CONDITIONS AND NOTIFY THE DESIGNER OF ALL ERRORS, OMISSIONS AND / OR ANOMALIES BEFORE BEGINNING THE WORK. ANY CHANGES OR SUBTITUTIONS TO DETAILS OR SPECIFIED MATERIALS SHOW ON THIS DRAWING MUST BE APPROVED BY THE ARCHITECT OR THE DESIGNER.

RÉVISIONS / REVISIONS

#	DATE	DESCRIPTION	PAR BY
1.	27-01-2025	PRE-CONSULTATION MEETING	NH

Committee of Adjustment
Received | Reçu le
Revised | Modifié le : 2025-03-27
City of Ottawa | Ville d'Ottawa
Comité de dérogation

Harnois Énergies

ÉQUIPE DE PROJET / TEAM PROJECT :

ARCHITECTURE & DESIGN :
mra architecture + design
T 514.493.6746 Fax
443 Saint-Claude, Montréal
Québec H2Y 3B6
www.mraa.ca

DOSSIER No. / FILE No. 2304-1010

STRUCTURAL / MECHANICAL / ELECTRICAL :
equation Services d'ingénierie intégrés
T 450.661.5022 Fax
4593 Rue Louis-B.-Mayer, Laval
Québec H7P 6G5
www.equation.ca

DOSSIER No. / FILE No.

CIVIL :
PARSONS
T +1 613.691.1545 Fax
100-1223 Michael St North, Ottawa
Ontario K1J 7T2
www.parsons.com

DOSSIER No. / FILE No.

CHARGÉ DE PROJET / PROJECT MANAGER : M. RENAUD
SIGNÉ PAR / APPROVED : MANON RENAUD

CLIENT: HARNOIS NEPEAN

PROJET / PROJECT: CONVENIENCE STORE /RESTO
1660 MERIVALE
NEPEAN, ONTARIO

DISCIPLINE / DÉPARTEMENT: ARCHITECTURE

TITRE DU DESSIN / TITLE: PROPOSED SITE PLAN

ÉCHELLE / SCALE: 1"= 20'-0'
DESSINÉ PAR / DRAWN BY: N.HANNA
DATE: 27-01-2025
No SITE
DOSSIER: 2304-1010
A-100
FEUILLE / SHEET: 2
DE / OF

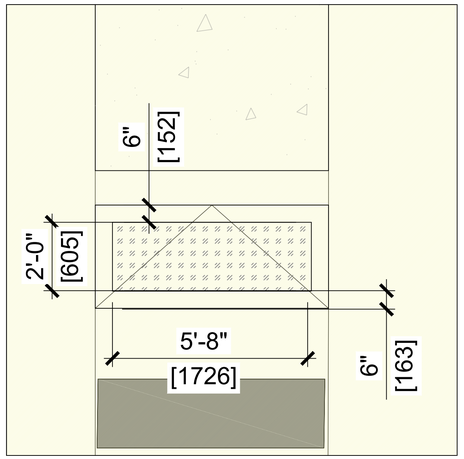

TWSI DETAIL

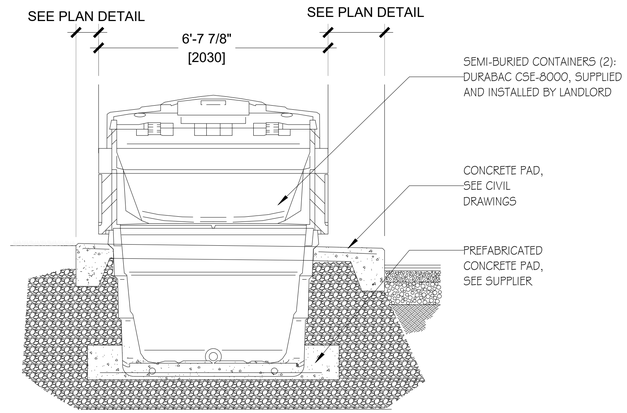

SECTION DETAIL - SEMI-BURIED CONTAINER

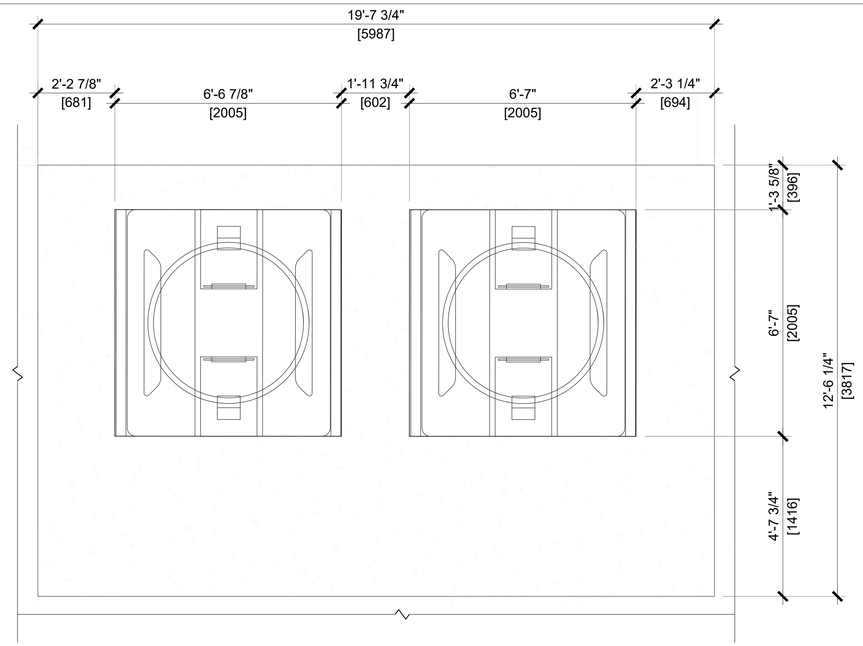

SEMI BURRIED CONTAINER DIMENISIONS

IMPORTANT

NE PAS MESURER LES PLANS, LIRE LES COTES SEULEMENT. L'ENTREPRENEUR DEVRA VÉRIFIER TOUS LES DESSINS, DÉTAILS, SPÉCIFICATIONS, DIMENSIONS ET MESURES AINSI QUE LES CONDITIONS DE LOCAUX OU DU CHANTIER, ET SIGNALER TOUTES ERREURS, OMISSIONS ET / OU ANOMALIES AVANT DE COMMENCER LES TRAVAUX. TOUS LES CHANGEMENTS OU SUBSTITUTIONS DE DÉTAILS ET DE MATÉRIAUX SPÉCIFIÉS SUR CE PLAN DEVRONT ÊTRE APPROUVÉS PAR L'ARCHITECTE OU LE DESIGNER.

DO NOT SCALE DRAWINGS, READ DIMENSIONS FIGURES ONLY. CONTRACTOR SHALL VERIFY ALL DRAWINGS, DETAILS, SPECIFICATIONS, DIMENSIONS AND MESUREMENTS AS WELL AS SITE OR PREMISES CONDITIONS AND NOTIFY THE DESIGNER OF ALL ERRORS, OMISSIONS AND / OR ANOMALIES BEFORE BEGINNING THE WORK. ANY CHANGES OR SUBTITUTIONS TO DETAILS OR SPECIFIED MATERIALS SHOW ON THIS DRAWING MUST BE APPROVED BY THE ARCHITECT OR THE DESIGNER.

RÉVISIONS / REVISIONS

#	DATE	DESCRIPTION	PAR BY
1.	027-01-2025	PRE-CONSULTATION MEETING	NH

Harnois Énergies

ÉQUIPE DE PROJET / TEAM PROJECT :

ARCHITECTURE & DESIGN :

mra architecture + design
T 514.493.6746 Fax
443 Saint-Claude, Montréal
Québec H2Y 3B6
www.mraa.ca

DOSSIER No. / FILE No. : 2304-1010

STRUCTURAL / MECHANICAL / ELECTRICAL :

equation
Services d'ingénierie intégrés
T 450.661.5022 Fax
4593 Rue Louis-B.-Mayer, Laval
Québec H7P 6G5
www.equation.ca

DOSSIER No. / FILE No. :

CIVIL :

PARSONS
T +1 613.691.1545 Fax
100-1223 Michael St North, Ottawa
Ontario K1J 7T2
www.parsons.com

DOSSIER No. / FILE No. :

CHARGÉ DE PROJET / PROJECT MANAGER : M. RENAUD

SIGNÉ PAR / APPROVED : MANON RENAUD

CLIENT : HARNOIS NEPEAN

PROJET / PROJECT : CONVENIENCE STORE /RESTO
1660 MERIVALE
NEPEAN, ONTARIO

DISCIPLINE / DÉPARTEMENT : ARCHITECTURE

TITRE DU DESSIN / TITLE : ARCHITECTURAL DETAILS

ÉCHELLE / SCALE : 1/2"= 1'-0"

DESSINÉ PAR / DRAWN BY : N.HANNA

DATE : 27-01-2025

No SITE :

DOSSIER : 2304-1010

A-101 (FEUILLE / SHEET) 2 (DE / OF)

Committee of Adjustment
Received | Reçu le
2025-03-21
City of Ottawa | Ville d'Ottawa
Comité de dérogation

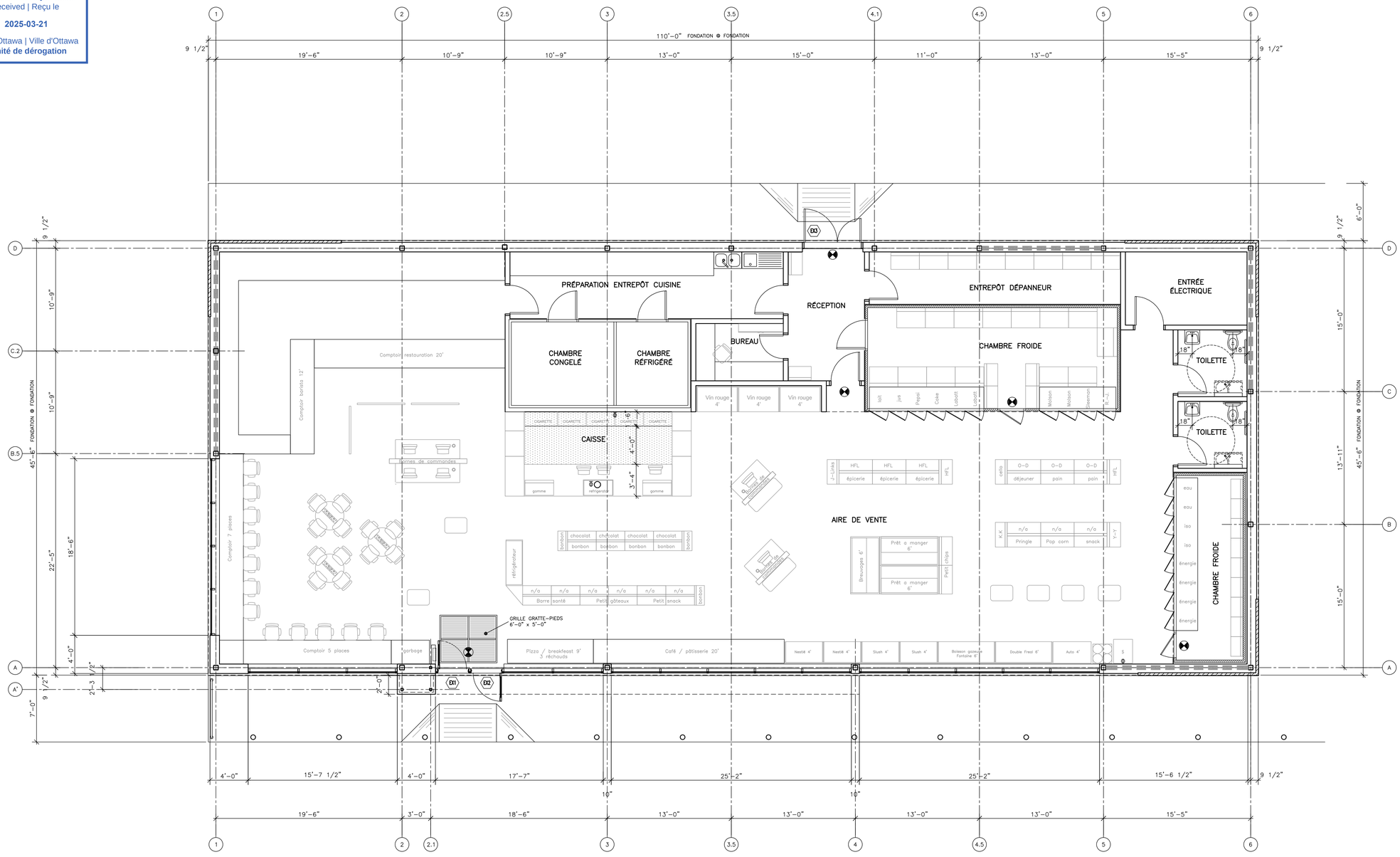

NE PAS UTILISER POUR CONSTRUCTION

		2 -	-	
		1 -	..../../..	
5 -	-	REVISIONS	DATE	
4 -	-	L'ENTREPRENEUR DEVRA, AVANT DE COMMENCER TOUT TRAVAIL, PRENDRE ET VERIFIER TOUTES COTES ET MESURES SUR PLACE		
3 -	-			
REVISIONS	DATE			

Hétu-Bellehumeur architectes inc.
435, boul. Ste-Anne , bureau 203, Joliette QC J6E 5A1
tél.: 450 755-4441 fax: 450 755-1068
hba@hbarchitectes.ca

PROJET
DÉPANNEUR/RESTO HARNOIS NEPEAN
-
1660, MERIVALE, NEPEAN, ONTARIO

TITRE
PLAN REZ-DE-CHAUSSÉE PROPOSÉ

DOSSIER	22-3761
ECHELLE	3/16" = 1'-0"
DATE	17 SEPTEMBRE 2024
DESSIN NO	3
	-

3761-prC.dwg, page_03, 2024-09-17 10:21am

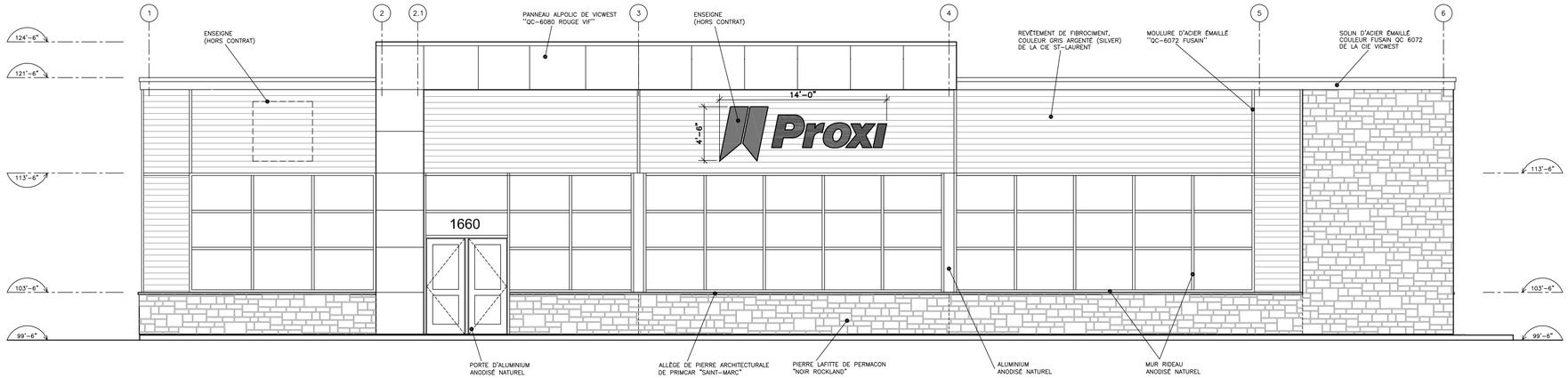

FACADE PRINCIPALE (MERIVALE Rd)

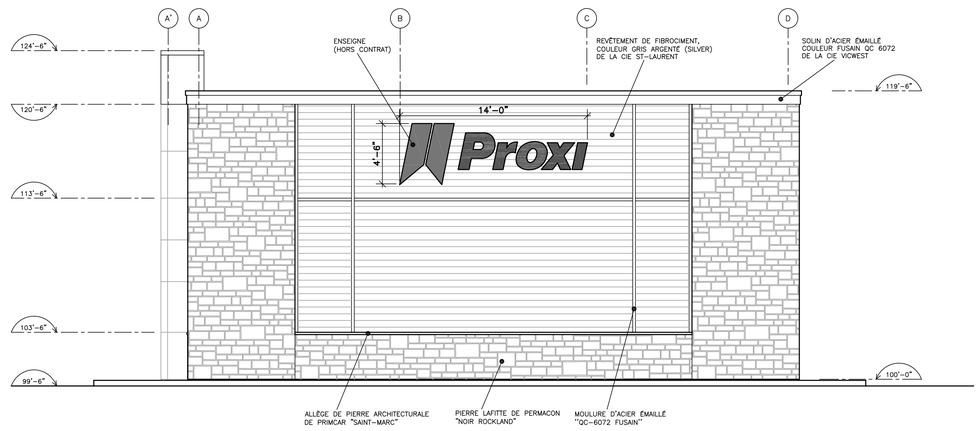

FACADE LATÉRALE DROITE (VIEWMOUNT Dr)

NE PAS UTILISER POUR CONSTRUCTION

		2 -	-
		1 -	..../../..
5 -	-	REVISIONS	DATE
4 -	-	L'ENTREPRENEUR DEVRA, AVANT DE COMMENCER TOUT TRAVAIL, PRENDRE ET VERIFIER TOUTES COTES ET MESURES SUR PLACE	
3 -	-		
REVISIONS	DATE		

Hétu-Bellehumeur architectes inc.
435, boul. Ste-Anne , bureau 203, Joliette QC J6E 5A1
tél.: 450 755-4441 fax: 450 755-1068
hba@hbarchitectes.ca

PROJET
DÉPANNEUR/RESTO HARNOIS NEPEAN
-
1660, MERIVALE, NEPEAN, ONTARIO

TITRE
FACADES PROPOSÉES

DOSSIER	22-3761
ECHELLE	3/16" = 1'-0"
DATE	17 SEPTEMBRE 2024
DESSIN NO	4 -

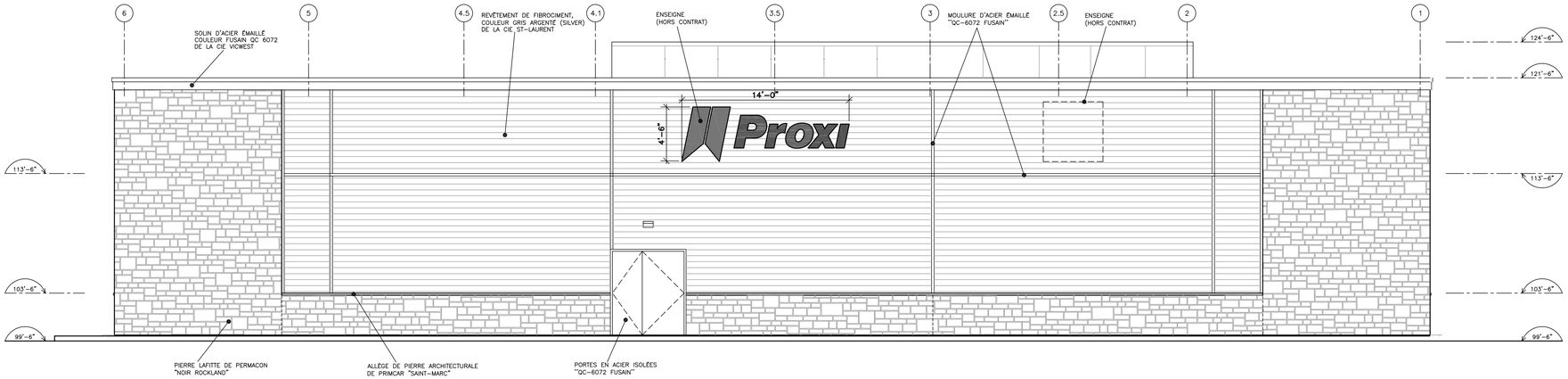

FACADE ARRIÈRE (GLENMANOR Dr)

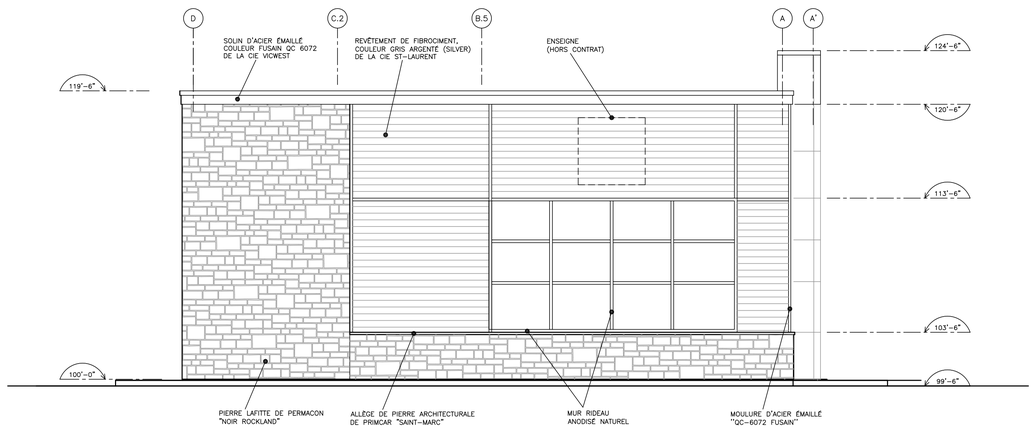

FACADE LATÉRALE GAUCHE

NE PAS UTILISER
POUR CONSTRUCTION

		2 -	-
		1 -	..../../..
5 -	-	REVISIONS	DATE
4 -	-	L'ENTREPRENEUR DEVRA, AVANT DE COMMENCER TOUT TRAVAIL, PRENDRE ET VERIFIER TOUTES COTES ET MESURES SUR PLACE	
3 -	-		
REVISIONS	DATE		

Hétu-Bellehumeur architectes inc.
435, boul. Ste-Anne , bureau 203, Joliette QC J6E 5A1
tél.: 450 755-4441 fax: 450 755-1068
hba@hbarchitectes.ca

PROJET
DÉPANNEUR/RESTO
HARNOIS NEPEAN
-
1660, MERIVALE, NEPEAN, ONTARIO

TITRE
FACADES
PROPOSÉES

DOSSIER 22-3761
ECHELLE 3/16" = 1'-0"
DATE 17 SEPTEMBRE 2024

DESSIN NO 5 -

3761-prC.dwg, page_05, 2024-09-17 10:27am

365179, 5022864

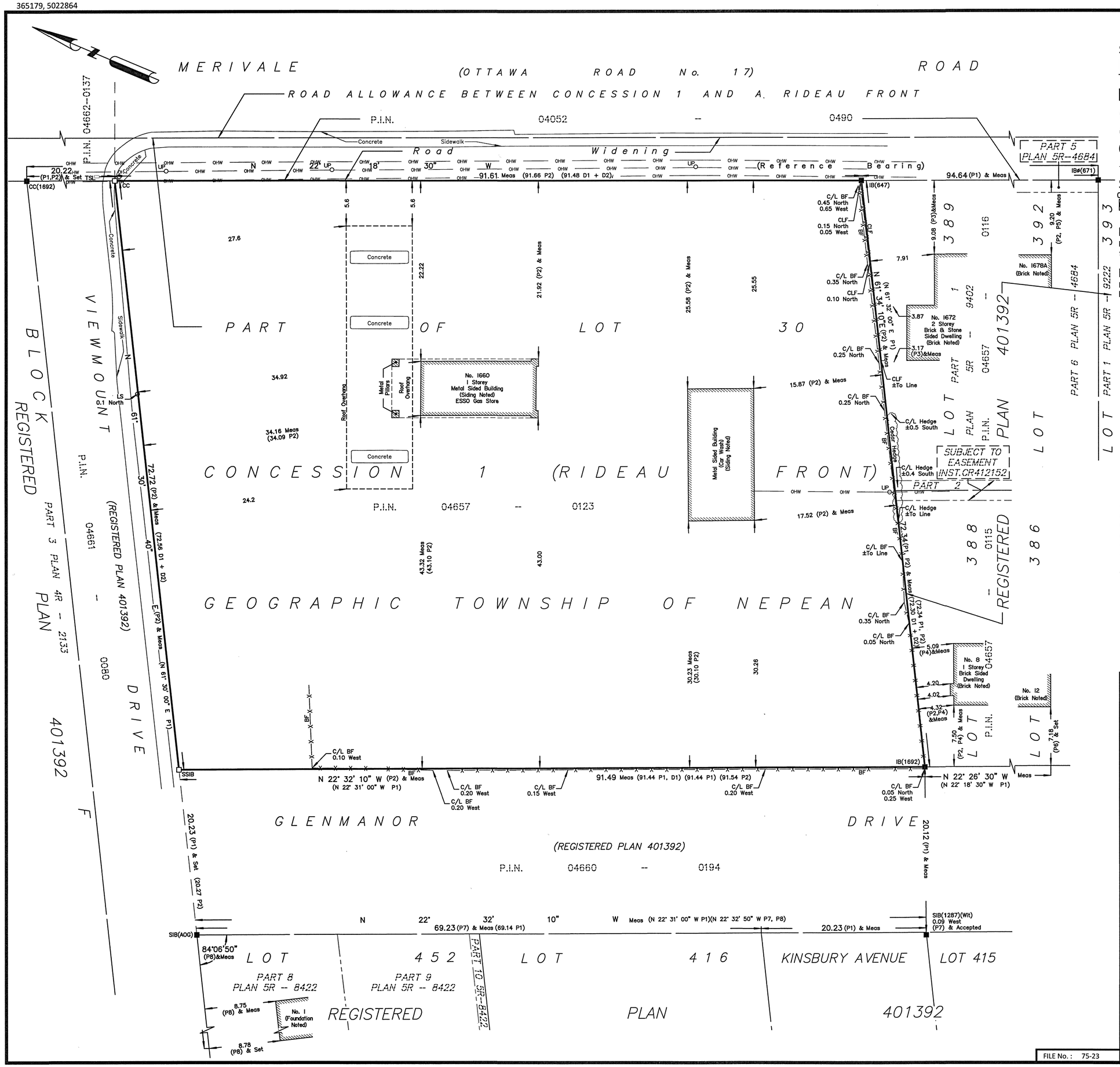

SURVEYOR'S REAL PROPERTY REPORT

PART 1 Plan of

PART OF LOT 30
CONCESSION 1 (RIDEAU FRONT)
GEOGRAPHIC TOWNSHIP OF NEPEAN
CITY OF OTTAWA

FARLEY, SMITH & DENIS SURVEYING LTD. 2023

Scale 1: 300

0 5 10 15 20 25 30 metres

Metric Note

Distances and/or coordinates on this plan are in metres and can be converted to feet by dividing by 0.3048.

Bearing Note

Bearings are astronomic and are referred to the westerly limit of Merivale Road having a bearing of N 22° 18' 30" W as shown on Registered Plan 401392.

Notes & Legend

—□—	Denotes	Survey Monument Planted
—■—	"	Survey Monument Found
SSIB	"	Short Standard Iron Bar
IB	"	Iron Bar
IBØ	"	Round Iron Bar
CC	"	Cut Cross
Meas	"	Measured
(OU)	"	Origin Unknown
(P1)	"	Registered Plan 401392
(P2)	"	Plan by (1692) dated September 01, 2011 (File No. 334-11)
(P3)	"	Plan by (647) dated July 28, 1960
(P4)	"	Plan by (AOG) dated April 22, 1968(Ref. No. 401392-3) Lot 388
(P5)	"	Plan 5R-4684
(P6)	"	Plan by (AOG) dated April 22, 1968(Ref. No. 401392-3) Lots 386 & 387
(P7)	"	Plan by (1287) dated May 27, 1986 (Job No. 256-86)
(P8)	"	Plan 5R-8422
(D1)	"	Instrument No. CR353127
(D2)	"	Instrument No. CR456851
— ow —	"	Overhead Wires
UP	"	Utility Pole
LS	"	Light Standard
TSL	"	Traffic Light
C/L	"	Centreline
CLF	"	Chain Link Fence
BF	"	Board Fence
———	"	Property Line

Committee of Adjustment
Received | Reçu le
2025-03-21
City of Ottawa | Ville d'Ottawa
Comité de dérogation

WARNING NO PERSON MAY COPY, REPRODUCE, DISTRIBUTE OR ALTER THIS PLAN IN WHOLE OR IN PART WITHOUT THE WRITTEN PERMISSION OF FARLEY, SMITH & DENIS SURVEYING LTD.
© FARLEY, SMITH & DENIS SURVEYING LTD., 2023

PART 2

1. REGISTERED RIGHTS-OF-WAY/EASEMENTS
   No rights-of-way or easements were found to be registered against the subject property.
2. PROPERTY IMPROVEMENTS
   The location of the fences and hedge in relation to the property lines are noted on the plan.
3. COMPLIANCE WITH MUNICIPAL ZONING BYLAWS
   Compliance is not certified by this report.
4. ADDITIONAL REMARKS
   Area of the subject property is 6603.3 square metres.

THIS REPORT WAS PREPARED FOR:
Hamois Energies Inc. _ _ _ _ _ _ _ _ ("The Client"), the Client's solicitors, mortgagees, and other related parties. The undersigned accepts no responsibility for use by other parties. See Part 2 of this Report.

Surveyor's Certificate

I certify that :

1. This survey and plan are correct and in accordance with the Surveys Act, the Surveyors Act and the Regulations made under them.
2. The survey was completed on the 21st day of April, 2023.

04-24-23
Date

Jamie Leslie
Ontario Land Surveyor

This plan of survey relates to AOLS Plan Submission Form Number V-48346

FARLEY, SMITH & DENIS SURVEYING LTD.

ONTARIO LAND SURVEYORS
CANADA LAND SURVEYORS

Unit 275, 30 COLONNADE ROAD, OTTAWA, ONTARIO K2E 7J6
TEL. (613) 727-8226 E-mail: fsdsurveys@bellnet.ca

FILE No. : 75-23

J:\2023\75-23_1660 Merivale rd @ Viewmount dr_ESSO_srpr\Final\75-23 1660 Merivale Rd_LT30 C1 RF 1_SRPR_F.dwg

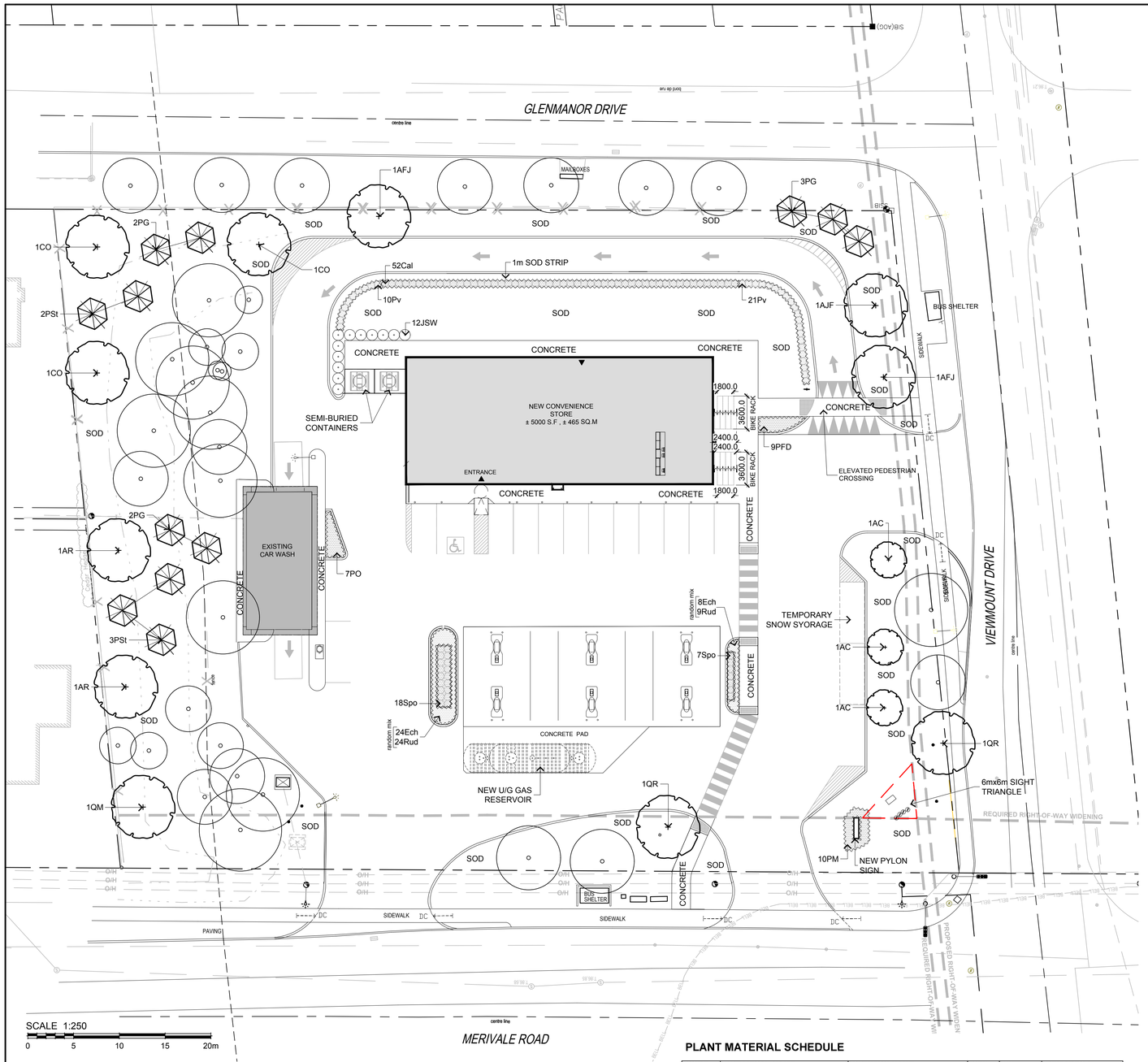

PLANT MATERIAL SCHEDULE

CODE	BOTANICAL NAME	COMMON NAME	QTY.	SIZE	REMARKS / (N) NATIVE
DECIDUOUS TREES					
AC	AMELANCHIER CANADENSIS	SHADBLOW SERVICEBERRY	3	50mm cal	B&B, single-stem / **N**
AFJ	ACER x FREEMANII JEFFERSRED	AUTUMN BLAZE MAPLE	3	50mm cal	B&B, single-stem / **N**
AR	ACER RUBRUM	RED MAPLE	2	50mm cal	B&B, single-stem / **N**
CO	CELTIS OCCIDENTALIS	COMMON HACKBERRY	3	50mm cal	B&B, single-stem / **N**
QM	QUERCUS MACROCARPA	BUR OAK	1	50mm cal	B&B, single-stem / **N**
QR	QUERCUS RUBRA	RED OAK	2	50mm cal	B&B, single-stem / **N**
CONIFEROUS TREES					
PG	PICEA PUNGENS GLAUCA	WHITE SPRUCE	7	200 cm ht	B&B / **N**
PSt	PINUS STROBUS	WHITE PINE	5	200 cm ht	B&B / **N**
SHRUBS					
JSW	JUNIPERUS SCOPULORUM 'WICHITA BLUE'	WICHITA BLUE JUNIPER	12	200cm ht	B&B, 120cm o/c
PFD	POTENTILLA FRUTICOSA 'GOLD DROP'	GOLD DROP CINQUEFOIL	9	50cm ht	potted, 80cm o/c
PM	PINUS MUGO MUGHUS	MUGHO PINE	10	50cm ht	potted, 100cm o/c
PO	PHYSOCARPUS OPULIFOLIUS	COMMON NINEBARK	7	50cm ht	potted, 100cm o/c / **N**
PERENNIALS					
Ech	ECHINACEA purpurea	PURPLE CONEFLOWER	32	15 cm pot	plant 60cm o/c / **N**
Rud	RUDBECKIA lacinita	CUTLEAF CONEFLOWER	33	15 cm pot	plant 60cm o/c / **N**
ORNAMENTAL GRASSES					
Cal	CALAMAGROSTIS x acutiflora 'Karl Foerster'	KARL FOERSTER REED GRASS	52	15cm pot	plant 75cm o/c
Pv	PANICUM virgatum	SWITCH GRASS	31	15 cm pot	plant 75cm o/c / **N**
Spo	SPOROBOLUS heterolepis	PRAIRE DROPSEED	25	15cm pot	plant 75cm o/c / **N**

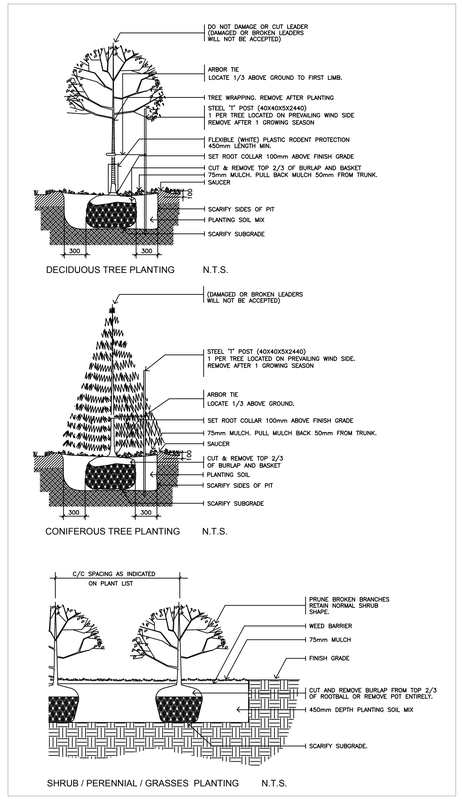

2 L2.01 PLANTING DETAILS NTS

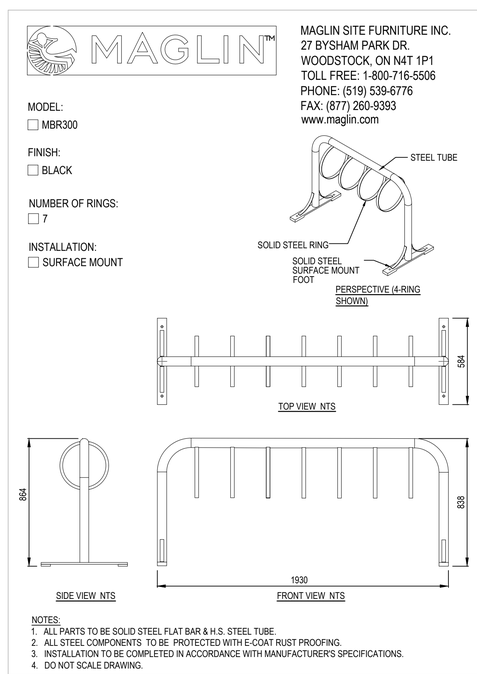

2 L1.01 BICYCLE RACK NTS

LEGEND / SYMBOL

- EXISTING TREE TO BE RETAINED (Refer to Existing Tree Inventory)
- CRZ (Critical Root Zone)
- PROPOSED DECIDUOUS TREE DETAIL 1/L1.01
- PROPOSED CONIFEROUS TREE DETAIL 1/L1.01
- PROPOSED SHRUBS, PERENNIALS, ORNAMENTAL GRASSES DETAIL 1/L1.01
- PROPOSED BICYCLE RACK DETAIL 2/L1.01

GENERAL NOTES

1. This drawing shall be read in conjunction with all relevant Architectural, Engineering and related Drawings and Documents.
2. Refer to Engineering Drawings for Grading and Servicing.
3. Refer to Architectural Drawings for Site layout.
4. Contractor shall provide the location(s) of all services/utilities by consulting Municipal Authorities and Utility companies and shall be responsible for adequate protection from damage during construction.
5. Plant material shall be No.1 Grade and shall comply with the Metric Guide Specifications For Nursery Stock (latest edition), published by the Canadian Nursery Trades Association.
6. Plant Material locations are **Schematic / Approximate only.** Contractor shall stake out locations on site prior to work.
7. Contractor shall guarantee all plant material for a period of one (1) full year from the date of final acceptance.
8. **Shrubs** shall be planted in a continuous prepared bed of 450mm depth planting soil mix covered over with a woven polypropylene weed control fabric **(LANDSCAPE FABRIC-Green-Line by Thrace-LINQ)** and 75mm depth composted pine mulch to finish grade, as specified **Perennials** and **Ornamental Grasses** shall be planted in a continuous prepared bed of 450mm depth planting soil mix covered over with 75mm depth composted pine mulch to finish grade.(**NO WEED CONTROL FABRIC**), as specified
9. Sod areas to receive 125mm topsoil. Sod shall be No. 1 quality conforming to the Canadian Nursery Sod Growers Specification.
10. Reinstate all areas damaged or disturbed beyond the limit of Work.
11. Plant Material substitutions shall not be permitted without written approval from the Consultant.
12. Contractor shall advise Consultant a minimum of **48hrs**. prior to proceeding landscape work and any required Field Reviews.
13. **THIS PLAN HAS BEEN PREPARED FOR MUNICIPAL SITE PLAN APPROVAL ONLY AND MAY NOT BE USED FOR ANY OTHER PURPOSE.**

LOCATION PLAN

Harnois Énergies

OWNER:
HARNOIS NEPEAN
2489 Sheffield Rd.. Ottawa, ON K1B 3V6

ARCHITECT:
MRA ARCHITECTURE + DESIGN
443 Saint-Claude, Montreal, QC H2Y 3B6

CIVIL ENGINEER:
PARSONS
100-1223 Michael St. N. Ottawa ON K1J 7T2

ONTARIO LAND SURVEYOR:
Farley, Smith & Denis Surveying Ltd.
30 Colonnade Rd., Ottawa, ON K2E 7J6

LANDSCAPE ARCHITECT
LEVSTEK CONSULTANTS INC.
5871 Hugh Cresc., Ottawa, ON K0A 2W0

LEGAL DESCRIPTION:
Part of Lot 30, Concession 1 (Rideau Front), Geographic Township of Nepean, City of Ottawa.

Committee of Adjustment
Received | Reçu le
2025-03-21
City of Ottawa | Ville d'Ottawa
Comité de dérogation

FOR APPROVAL ONLY

no.	date	revision
3.	FEB.14/25	RE- ISSUE FOR SITE PLAN APPROVAL
2.	OCT.11/24	RE- ISSUE FOR SITE PLAN APPROVAL
1.	MAR. 11/24	ISSUE FOR SITE PLAN APPROVAL

North Arrow

Stamp
ONTARIO ASSOCIATION OF LANDSCAPE ARCHITECTS
RUDY S. LEVSTEK
OALA
LICENSED LANDSCAPE ARCHITECT

Contractor shall check and verify all dimensions on site and report all errors and/or omissions to the Consultant.

Work to be done in accordance with all applicable codes and by-laws.

Do not scale Drawing.

This Drawing shall not be used for construction until signed by the Consultant.

Copyright reserved. This Drawing is the exclusive property of Levstek Consultants Inc. and shall not be used without consent.

Consultant
LEVSTEK CONSULTANTS
LANDSCAPE ARCHITECTS
5871 Hugh Crescent · Ottawa · Ontario · K0A 2W0
613 · 826 · 0518

Project
CONVENIENCE STORE / RESTO

1660 MERIVALE ROAD
NEPEAN, ONTARIO

Drawing Title
LANDSCAPE PLAN

Drawn MGB
Scale 1:250
Project No. 1226
Drawing No. L1.01

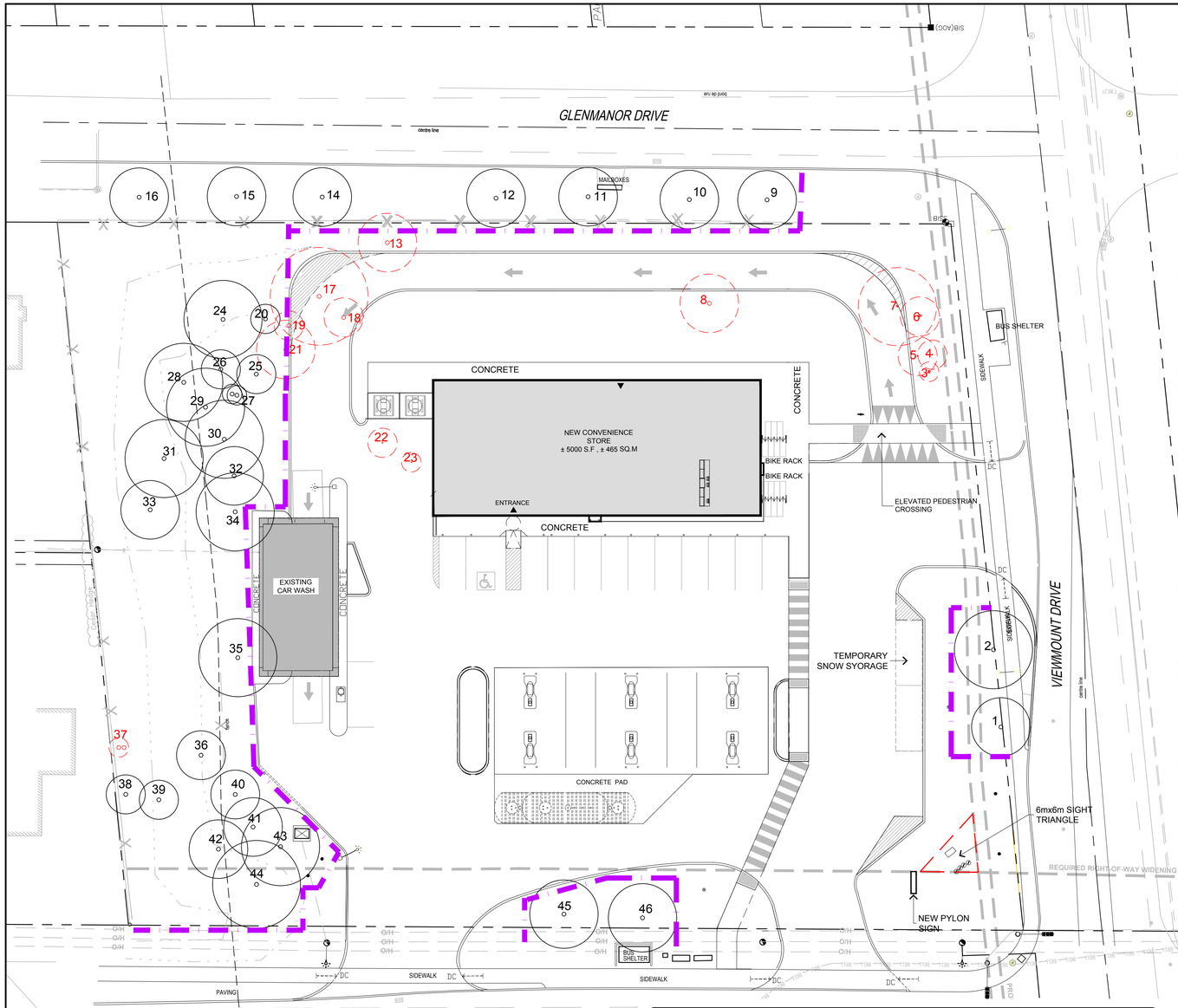

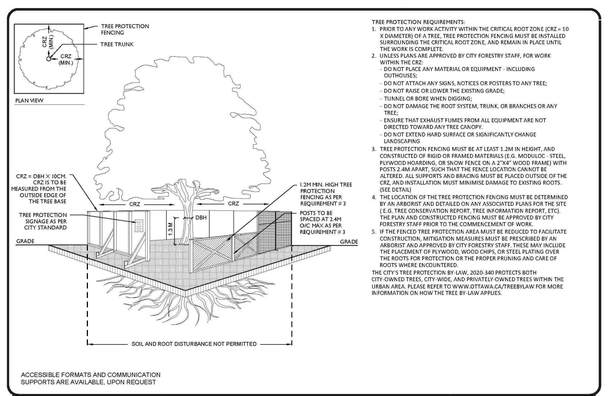

TREE PROTECTION REQUIREMENTS:

1. PRIOR TO ANY WORK ACTIVITY WITHIN THE CRITICAL ROOT ZONE (CRZ = 10 X DIAMETER) OF A TREE, TREE PROTECTION FENCING MUST BE INSTALLED SURROUNDING THE CRITICAL ROOT ZONE, AND REMAIN IN PLACE UNTIL THE WORK IS COMPLETE.
2. UNLESS PLANS ARE APPROVED BY CITY FORESTRY STAFF, FOR WORK WITHIN THE CRZ:
   - DO NOT PLACE ANY MATERIAL OR EQUIPMENT - INCLUDING OUTHOUSES;
   - DO NOT ATTACH ANY SIGNS, NOTICES OR POSTERS TO ANY TREE;
   - DO NOT RAISE OR LOWER THE EXISTING GRADE;
   - TUNNEL OR BORE WHEN DIGGING;
   - DO NOT DAMAGE THE ROOT SYSTEM, TRUNK, OR BRANCHES OR ANY TREE;
   - ENSURE THAT EXHAUST FUMES FROM ALL EQUIPMENT ARE NOT DIRECTED TOWARD ANY TREE CANOPY.
   - DO NOT EXTEND HARD SURFACE OR SIGNIFICANTLY CHANGE LANDSCAPING.
3. TREE PROTECTION FENCING MUST BE AT LEAST 1.2M IN HEIGHT, AND CONSTRUCTED OF RIGID OR FRAMED MATERIALS (E.G. MODULOC - STEEL, PLYWOOD HOARDING, OR SNOW FENCE ON A 2"X4" WOOD FRAME) WITH POSTS 2.4M APART, SUCH THAT THE FENCE LOCATION CANNOT BE ALTERED. ALL SUPPORTS AND BRACING MUST BE PLACED OUTSIDE OF THE CRZ, AND INSTALLATION MUST MINIMIZE DAMAGE TO EXISTING ROOTS. (SEE DETAIL)
4. THE LOCATION OF THE TREE PROTECTION FENCING MUST BE DETERMINED BY AN ARBORIST AND DETAILED ON ANY ASSOCIATED PLANS FOR THE SITE (E.G. TREE CONSERVATION REPORT, TREE INFORMATION REPORT, ETC). THE PLAN AND CONSTRUCTED FENCING MUST BE APPROVED BY CITY FORESTRY STAFF PRIOR TO THE COMMENCEMENT OF WORK.
5. IF THE FENCED TREE PROTECTION AREA MUST BE REDUCED TO FACILITATE CONSTRUCTION, MITIGATION MEASURES MUST BE PRESCRIBED BY AN ARBORIST AND APPROVED BY CITY FORESTRY STAFF. THESE MAY INCLUDE THE PLACEMENT OF PLYWOOD, WOOD CHIPS, OR STEEL PLATING OVER THE ROOTS FOR PROTECTION OR THE PROPER PRUNING AND CARE OF ROOTS WHERE ENCOUNTERED.

THE CITY'S TREE PROTECTION BY-LAW, 2020-340 PROTECTS BOTH CITY-OWNED TREES, CITY-WIDE, AND PRIVATELY-OWNED TREES WITHIN THE URBAN AREA. PLEASE REFER TO WWW.OTTAWA.CA/TREEBYLAW FOR MORE INFORMATION ON HOW THE TREE BY-LAW APPLIES.

ACCESSIBLE FORMATS AND COMMUNICATION SUPPORTS ARE AVAILABLE, UPON REQUEST

Ottawa

TREE PROTECTION SPECIFICATION

TO BE IMPLEMENTED FOR RETAINED TREES, BOTH ON SITE AND ON ADJACENT SITES, PRIOR TO ANY TREE REMOVAL OR SITE WORKS AND MAINTAINED FOR THE DURATION OF WORK ACTIVITIES ON SITE

SCALE: NTS
DATE: MARCH 2021
DRAWING NO.: 1 of 1

THIS DRAWING IS COLOUR DEPENDENT. NON-COLOUR COPIES MAY ALTER INTERPRETATION.

TREE CONSERVATION PLAN / REPORT

FOR PROPOSED 1660 MERIVALE ROAD RE- DEVELOPMENT

INTRODUCTION

In support of Site Plan Approval, and in accordance with the City of Ottawa's Tree Protection By-Law (No.2020-340), this Tree Conservation Report (TCR) identifies trees to be retained and protected under future development scenarios and, where feasible, recognizes opportunities to offset the loss of trees that cannot be retained or contribute to the City's forest cover targets.

EXISTING TREE INVENTORY

An inventory of existing trees, having a caliper of 10cm or more as measured 1.4m from existing grade, subject to this application, was conducted on Dec.18, 2023. Locates provided by VRSB, Arpenteurs Geometres, dated 2023-04-25.
The schedule identifies existing trees evaluated on the subject property at date of inventory:

TREE SPECIES AT RISK

No Tree Species at Risk, as identified under the Province of Ontario Endangered Species Act (ESA) were observed on subject property or within 25m of adjacent lands.

MITIGATIVE MEASURES

The following measures are recommended to promote survival for trees to be retained:

Tree Protection Barrier:
Barriers for tree protection shall be installed surrounding the Critical Root Zone (CRZ = 10 x diameter) of a tree to be protected. All of the supports and bracing for the barrier shall be placed outside of the protected area and installed to minimize root damage. Furthermore, while the desired effect of the barrier is to prevent construction traffic from entering the protected area, it shall be kept in place until all construction has been completed. The barrier shall also have signage attached to it indicating its purpose as a protection barrier. Repair, fuelling of machinery, storage and stockpiling of materials, shall not take place within this protected area. (See **TREE PROTECTION SPECIFICATION**)

Tree Protection Barrier material options:
(See **TREE PROTECTION SPECIFICATION**)

In addition:

- Do not place any material or equipment within the CRZ of the tree;
- Do no attach any signs, notices or posters to any tree;
- Do not raise or lower the existing grade within the CRZ without approval;
- Tunnel or bore when digging within the CRZ of a tree;
- Do not damage the root system, trunk or branches of any tree;
- Ensure that exhaust fumes from all equipment are NOT directed towards any tree's Canopy.

Surface Treatment:
A protective root buffer is required for a minimum distance of 2.0 metres outside of the tree protection barrier. This buffer will consist of woodchips spread to a thickness of 10 cm covered by a layer of granular 'A' (gravel) deep enough to stabilize 2 cm thick plywood. This will help prevent the compaction of soil surrounding the trees' fine feeding roots.

Excavation & Root Pruning:
Excavation shall not take place within the CRZ. Instead, directional micro-tunnelling and boring shall be employed. When excavation must take place outside of the CRZ, a trench shall be carefully dug either by hand or with hydraulic or pneumatic air excavation technology. After the trench is established, a backhoe or other equipment stationed outside of the CRZ may be used to complete the work. If roots are encountered while trenching outside the CRZ, they shall be cleanly cut with either pruning shears or a saw wiped with alcohol before each cut.

Treatment of Exposed Roots:
If tree roots are exposed during construction, they shall be reburied immediately with soil or covered temporarily with burlap, filter cloth or woodchips and kept moist (i.e. watering with a soft-spray nozzle at least three times a week). A covering of plastic shall be used to facilitate moisture retention during an extended period when watering may not be possible (i.e. over weekends).

Fertilization:
Fertilizing the trees with a liquid, deep root, slow release fertilizer is recommended only after the completion of all construction.

Retaining Walls/ Tree Wells:
Avoid changes in grade close to trees to be retained. Where grade changes cannot be avoided, the installation of retaining walls or tree wells shall be considered for tree preservation.

WILDLIFE PROTOCOL

No tree removal shall occur between April 15 and August 15, unless a qualified wildlife biologist has determined that no bird nesting is occurring within 5 days prior to removal.

SCHEDULE OF EXISTING TREES

(Inventory conducted Dec.18, 2023)

CODE	SPECIES	CONDITION	DBH[1] (cm)	OWNERSHIP	ACTION NOTES
1	Honeylocust (*Gleditsia*)	Good	30	Subject Property	Protect / **RETAIN**
2	Honeylocust (*Gleditsia*)	Good	40	Subject Property	Protect / **RETAIN**
3	Crabapple (*Malus*)	Good; 5-stem	10-20	Subject Property	Development conflict / **REMOVE**
4	Apple (*Malus*)	Good	15	Subject Property	Development conflict / **REMOVE**
5	Manitoba Maple (*Acer negundo*)	Good	20	Subject Property	Development conflict / **REMOVE**
6	Crabapple (*Malus*)	Good; 5-stem	10-20	Subject Property	Development conflict / **REMOVE**
7	Manitoba Maple (*Acer negundo*)	Good; 2-stem	35-40	Subject Property	Development conflict / **REMOVE**
8	Oak (*Quercus*)	Good	30	Subject Property	Development conflict / **REMOVE**
9	Maple (*Acer*)	Good	30	City (R.O.W)	Protect / **RETAIN**
10	Hackberry (*Celtis occidentalis*)	Good	30	City (R.O.W)	Protect / **RETAIN**
11	Maple (*Acer*)	Good	30	City (R.O.W)	Protect / **RETAIN**
12	Hackberry (*Celtis occidentalis*)	Good	30	City (R.O.W)	Protect / **RETAIN**
13	Spruce (*Picea*)	Good	30	Subject Property	Development conflict / **REMOVE**
14	Hackberry (*Celtis occidentalis*)	Good	30	City (R.O.W)	Protect / **RETAIN**
15	Maple (*Acer*)	Good	30	City (R.O.W)	Protect / **RETAIN**
16	Hackberry (*Celtis occidentalis*)	Good	30	City (R.O.W)	Protect / **RETAIN**
17	Pine (*Pinus*)	Good	50	Subject Property	Development conflict / **REMOVE**
18	Amur Maple (*Acer ginnala*)	Good; multi-stem	20	Subject Property	Development conflict / **REMOVE**
19	Amur Maple (*Acer ginnala*)	Good; multi-stem	15	Subject Property	Development conflict / **REMOVE**
20	Amur Maple (*Acer ginnala*)	Good; multi-stem	15	Subject Property	Protect / **RETAIN**
21	Amur Maple (*Acer ginnala*)	Good; multi-stem	20	Subject Property	Development conflict / **REMOVE**
22	Manitoba Maple (*Acer negundo*)	Good	15	Subject Property	Development conflict / **REMOVE**
23	Amur Maple (*Acer ginnala*)	Good; multi-stem	10	Subject Property	Development conflict / **REMOVE**
24	Pine (*Pinus*)	Good	40	Subject Property	Protect / **RETAIN**
25	Amur Maple (*Acer ginnala*)	Good; multi-stem	15	Subject Property	Protect / **RETAIN**
26	Amur Maple (*Acer ginnala*)	Good; multi-stem	15	Subject Property	Protect / **RETAIN**
27	Amur Maple (*Acer ginnala*)	Good; multi-stem	10	Subject Property	Protect / **RETAIN**
28	Pine (*Pinus*)	Good	40	Subject Property	Protect / **RETAIN**
29	Amur Maple (*Acer ginnala*)	Good; multi-stem	40	Subject Property	Protect / **RETAIN**
30	Amur Maple (*Acer ginnala*)	Good; multi-stem	40	Subject Property	Protect / **RETAIN**
31	Pine (*Pinus*)	Good	40	Subject Property	Protect / **RETAIN**
32	Amur Maple (*Acer ginnala*)	Good; multi-stem	30	Subject Property	Protect / **RETAIN**
33	Spruce (*Picea*)	Good	30	Subject Property	Protect / **RETAIN**
34	Pine (*Pinus*)	Good	40	Subject Property	Protect / **RETAIN**
35	Maple (*Acer*)	Good	40	Subject Property	Protect / **RETAIN**
36	Spruce (*Picea*)	Poor; significant crown loss.	25	Subject Property	Protect / **RETAIN**
37	Manitoba Maple (*Acer negundo*)	Poor; significant crown loss.	10	Subject Property	Hazardous condition / **REMOVE**
38	Manitoba Maple (*Acer negundo*)	Good	20	Subject Property	Protect / **RETAIN**
39	Spruce (*Picea*)	Good	20	Subject Property	Protect / **RETAIN**
40	Pine (*Pinus*)	Good	25	Subject Property	Protect / **RETAIN**
41	Pine (*Pinus*)	Good	30	Subject Property	Protect / **RETAIN**
42	Pine (*Pinus*)	Good	30	Subject Property	Protect / **RETAIN**
43	Pine (*Pinus*)	Good	40	Subject Property	Protect / **RETAIN**
44	Pine (*Pinus*)	Good	45	Subject Property	Protect / **RETAIN**
45	Honeylocust (*Gleditsia*)	Good	35	Subject Property	Protect / **RETAIN**
46	Honeylocust (*Gleditsia*)	Good	35	Subject Property	Protect / **RETAIN**

[1] DBH Diameter at breast height, or 1.4m from grade (unless otherwise noted).

LEGEND / SYMBOL

- EXISTING TREE TO BE RETAINED (Refer to Existing Tree Inventory) CRZ (Critical Root Zone)
- EXISTING TREE TO BE REMOVED (Refer to Existing Tree Inventory) CRZ (Critical Root Zone)
- PROPOSED TREE PROTECTION BARRIER

LOCATION PLAN

Harnois Énergies

OWNER:
HARNOIS NEPEAN
2489 Sheffield Rd.. Ottawa, ON K1B 3V6

ARCHITECT:
MRA ARCHITECTURE + DESIGN
443 Saint-Claude, Montreal, QC H2Y 3B6

CIVIL ENGINEER:
PARSONS
100-1223 Michael St. N. Ottawa ON K1J 7T2

ONTARIO LAND SURVEYOR:
Farley, Smith & Denis Surveying Ltd.
30 Colonnade Rd., Ottawa, ON K2E 7J6

LANDSCAPE ARCHITECT
LEVSTEK CONSULTANTS INC.
5871 Hugh Cresc., Ottawa, ON K0A 2W0

LEGAL DESCRIPTION:
Part of Lot 30, Concession 1 (Rideau Front), Geographic Township of Nepean, City of Ottawa.

FOR APPROVAL ONLY

no.	date	revision
3.	FEB.14/25	RE- ISSUE FOR SITE PLAN APPROVAL
2.	OCT. 11/24	RE- ISSUE FOR SITE PLAN APPROVAL
1.	MAR. 11/24	ISSUE FOR SITE PLAN APPROVAL

North Arrow

Stamp

ONTARIO ASSOCIATION OF LANDSCAPE ARCHITECTS
RUDY J. LEVSTEK
OALA
MEMBER

Contractor shall check and verify all dimensions on site and report all errors and/or omissions to the Consultant.

Work to be done in accordance with all applicable codes and by-laws.

Do not scale Drawing.

This Drawing shall not be used for construction until signed by the Consultant.

Copyright reserved. This Drawing is the exclusive property of Levstek Consultants Inc. and shall not be used without consent.

Consultant
LEVSTEK CONSULTANTS
LANDSCAPE ARCHITECTS
5871 Hugh Crescent · Ottawa · Ontario · K0A 2W0
613 · 826 · 0518

Project
CONVENIENCE STORE / RESTO

1660 MERIVALE ROAD
NEPEAN, ONTARIO

Drawing Title
TREE CONSERVATION PLAN / REPORT

Drawn: MGB
Scale: 1:250
Project No.: 1226
Drawing No.: L1.02

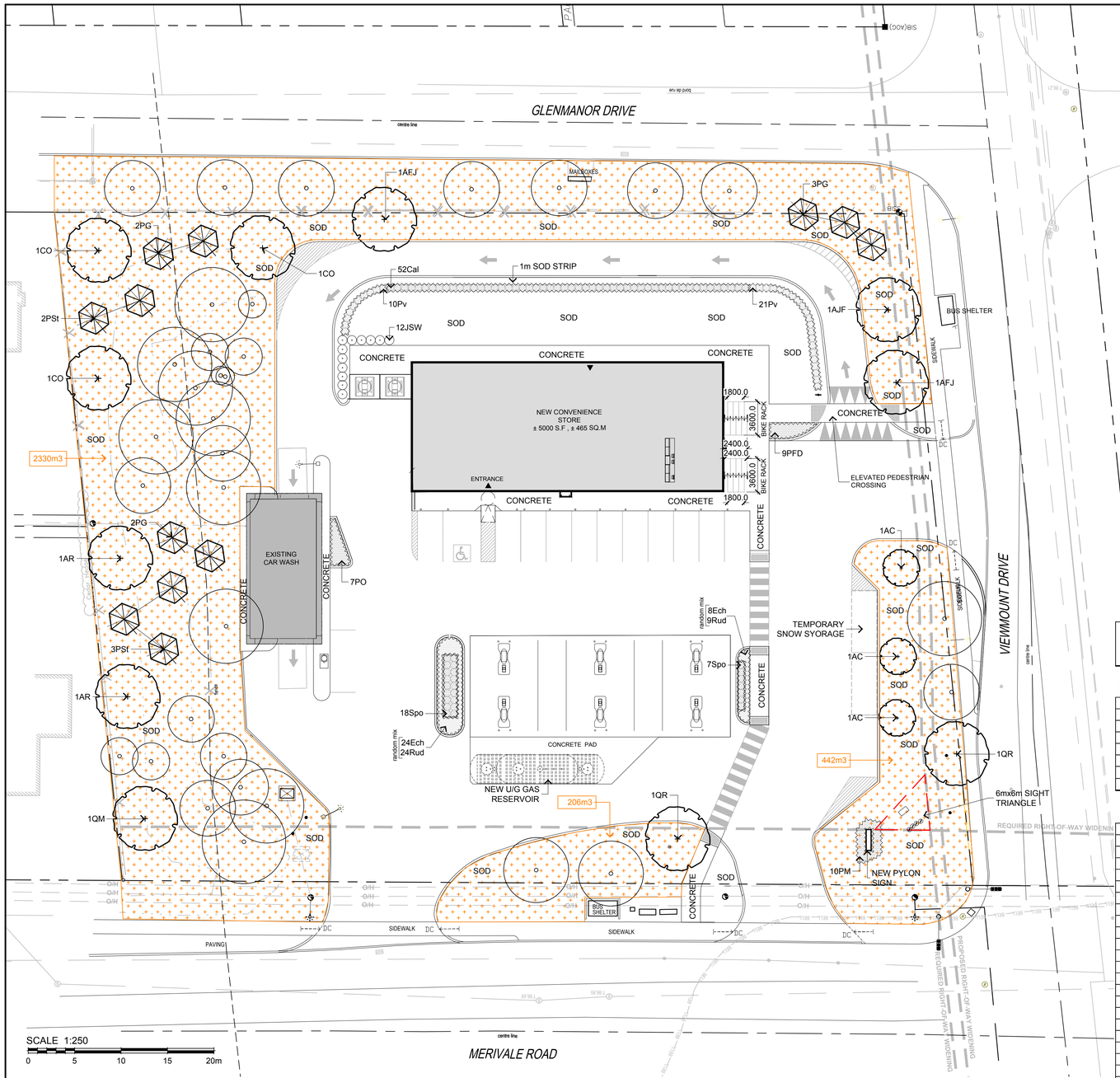

THIS DRAWING IS COLOUR DEPENDENT.
NON-COLOUR COPIES MAY ALTER INTERPRETATION.

LEGEND / SYMBOL

- EXISTING TREE TO BE RETAINED (Refer to Existing Tree Inventory) — CRZ (Critical Root Zone)
- PROPOSED DECIDUOUS TREE
- PROPOSED CONIFEROUS TREE
- PROPOSED SHRUBS, PERENNIALS, ORNAMENTAL GRASSES
- SOIL VOLUME DATA

TREE CANOPY CALCULATION*

**Example taken from North Oakville Urban Forest Strategic Management Plan for Development Applications.*

TREE (Code)	SPECIES	QTY	STATURE L (154.0m2) M (78.5m2) S (7.0m2)	SOIL VOLUME per tree (m3)	SOIL VOLUME COMPLIANCE Yes / No	CANOPY AREA (m2)	CANOPY AREA SUBTOTAL (m2)

PROPOSED CANOPY ON SITE
(*Projection assumed at 40 yr. maturity*)

AC	AMELANCHIER CANADENSIS	3	**S**	73	**Y**	21.0	
AFJ	ACER x FREEMANII JEFFERSRED	3	**M**	45	**Y**	235.5	
AR	ACER RUBRUM	2	**M**	45	**Y**	157.0	
CO	CELTIS OCCIDENTALIS	3	**M**	45	**Y**	235.5	
PG	PICEA GLAUCA	7	**M**	45	**Y**	549.5	
PSt	PINUS STROBUS	5	**M**	45	**Y**	392.5	
QM	QUERCUS MACROCARPA	1	**L**	45	**Y**	154.0	
QR	QUERCUS RUBRA	2	**L**	73 / 68	**Y**	308.0	
						SUBTOTAL	**2053.0**

EXISTING CANOPY ON SITE

1	Honeylocust (*Gleditsia*)					28.2	
2	Honeylocust (*Gleditsia*)					50.2	
20	Amur Maple (*Acer ginnala*)					4.6	
24	Pine (*Pinus*)					50.2	
25	Amur Maple (*Acer ginnala*)					12.5	
26	Amur Maple (*Acer ginnala*)					0.0	
27	Amur Maple (*Acer ginnala*)					5.4	
28	Pine (*Pinus*)					24.2	
29	Amur Maple (*Acer ginnala*)					28.8	
30	Amur Maple (*Acer ginnala*)					50.2	
31	Pine (*Pinus*)					39.0	
32	Amur Maple (*Acer ginnala*)					27.2	
33	Spruce (*Picea*)					28.7	
34	Pine (*Pinus*)					50.2	
35	Maple (*Acer*)					50.2	
36	Spruce (*Picea*)					19.6	
38	Manitoba Maple (*Acer negundo*)					12.5	
39	Spruce (*Picea*)					11.2	
40	Pine (*Pinus*)					15.6	
41	Pine (*Pinus*)					28.3	
42	Pine (*Pinus*)					18.8	
43	Pine (*Pinus*)					20.0	
44	Pine (*Pinus*)					51.6	
45	Honeylocust (*Gleditsia*)					38.5	
46	Honeylocust (*Gleditsia*)					38.5	
					SUBTOTAL		**704.2**
						X 1.5 FACTOR	**1056.3**

EXISTING CANOPY OVERHANG ON SITE

						SUBTOTAL	**00.0**

TOTAL CANOPY AREA (m2)	**3109.3**

CANOPY SUMMARY

TOTAL SITE AREA (**m2**)	(per Survey Plan)	**6603.3**
SITE CANOPY COVER (**%**)		**47.1**

LOCATION PLAN

Harnois Énergies

OWNER:
HARNOIS NEPEAN
2489 Sheffield Rd.. Ottawa, ON K1B 3V6

ARCHITECT:
MRA ARCHITECTURE + DESIGN
443 Saint-Claude, Montreal, QC H2Y 3B6

CIVIL ENGINEER:
PARSONS
100-1223 Michael St. N. Ottawa ON K1J 7T2

ONTARIO LAND SURVEYOR:
Farley, Smith & Denis Surveying Ltd.
30 Colonnade Rd., Ottawa, ON K2E 7J6

LANDSCAPE ARCHITECT
LEVSTEK CONSULTANTS INC.
5871 Hugh Cresc., Ottawa, ON K0A 2W0

LEGAL DESCRIPTION:
Part of Lot 30, Concession 1 (Rideau Front), Geographic Township of Nepean, City of Ottawa.

FOR APPROVAL ONLY

no.	date	revision
3.	FEB. 14/25	RE- ISSUE FOR SITE PLAN APPROVAL
2.	OCT. 11/24	RE- ISSUE FOR SITE PLAN APPROVAL
1.	MAR. 11/24	ISSUE FOR SITE PLAN APPROVAL

North Arrow

Stamp: ONTARIO ASSOCIATION OF LANDSCAPE ARCHITECTS — REGISTERED — MARK LEVSTEK

Contractor shall check and verify all dimensions on site and report all errors and/or omissions to the Consultant.

Work to be done in accordance with all applicable codes and by-laws.

Do not scale Drawing.

This Drawing shall not be used for construction until signed by the Consultant.

Copyright reserved. This Drawing is the exclusive property of Levstek Consultants Inc. and shall not be used without consent.

Consultant
LEVSTEK CONSULTANTS
LANDSCAPE ARCHITECTS
5871 Hugh Crescent · Ottawa · Ontario · K0A 2W0
613 · 826 · 0518

Project
CONVENIENCE STORE / RESTO

1660 MERIVALE ROAD
NEPEAN, ONTARIO

Drawing Title
TREE CANOPY COVER PLAN

Drawn	MGB		Drawing No.
Scale	1:250	Project No. 1226	L1.03